Panasonic

heating & cooling solutions

Multi zone duct unit PQ4 / PQ5 Standard

Zoned air flow. Maximum comfort. Minimal energy.

· Individual zone temperature control with dedicated fans and motors for each outlet integrated
· Multi-zone management for 4 or 5 zones
· Two installation possibilities (horizontal / vertical)
· Simplified duct installation with reduced system complexity
· No bypass duct required thanks to intelligent direct control, ensuring optimal comfort and efficiency
· Bulit-in wi-fi control

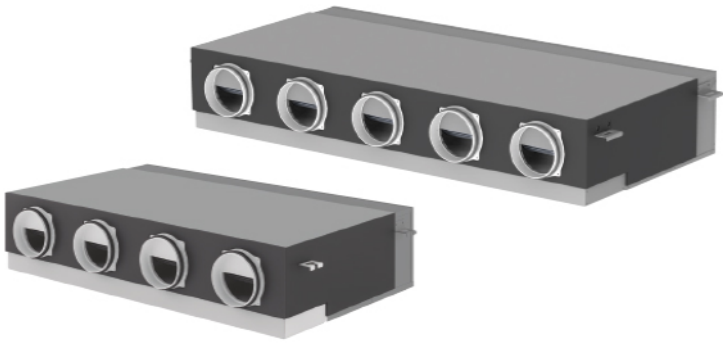

PACi

R32 A++ INVERTER+

Multi zone duct PQ4 / PQ5

Multi zone management - Energy saving solution

Each zone can be controlled independently via the wall-mounted controller (PCZ-EEB749), which can also operate multiple fans for wider coverage or higher capacity.

a: Otdoor unit. * Wall-mounted controller (PCZ-EEB749).

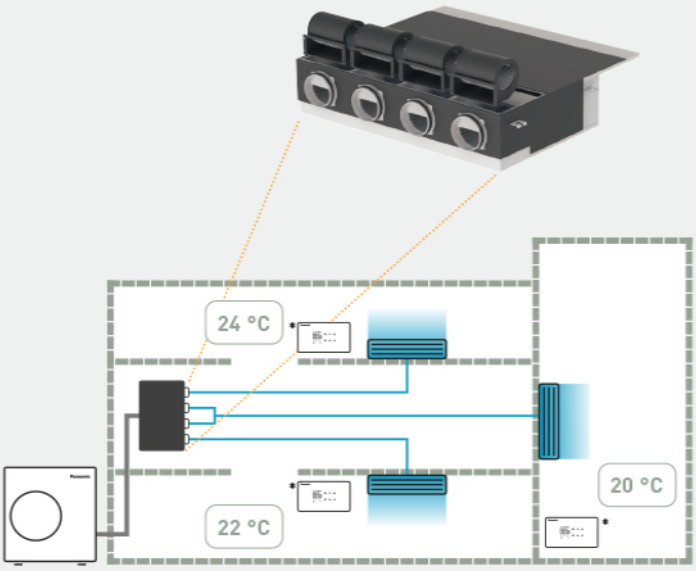

a

High installation flexibility

· Up to 5 zones design.
· Single or multi-fan control by single wall control. It is possible to control several fans by a single wall control or a single signal in the case of the need to provide ample zone coverage or higher heating / cooling requirements.

a: Example: 4 air outlets for 4 independent zones. b: Example: 4 air outlets for 3 independent zones + Zone 1 with dual channel + Zone 2 and 3 with single channel.

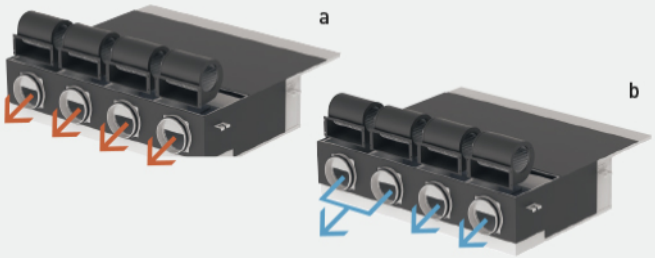

2 installation possibilities (horizontal/vertical)

Vertical installation is available.
External static pressure 130Pa, sufficient for remotely installing units away from the zones.

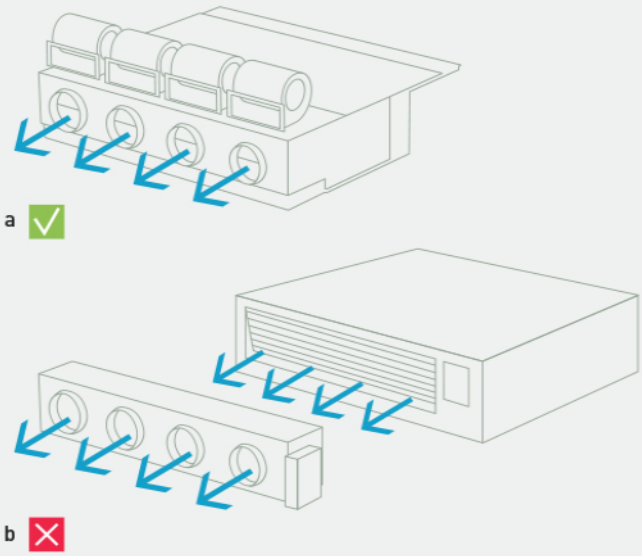

Bypass duct free solution

Multi zone duct solution eliminates bypass ducts, offering independent fan control per zone for precise comfort and energy savings. It ensures optimized air flow, customizable temperature control, and lower power consumption compared to traditional systems.

Architecture:
a (Multi zone duct unit): Independent fans | b (Traditional system): Dampers only

Air flow and comfort:
a: Active, leak-free air flow | b: Bypass issues

Thermal control:
a: Customisable control | b: Limited algorithms

Energy efficiency:
a: Fans run only when required | b: Bypass wastes energy

Pressure control:
a: Zone-by-zone control | b: One fan for all ducts

Smart and intuitive controls

One simple and quick internet connection for all the zones.

The multi-zone duct unit features a built-in Wi-Fi module with Ethernet port, providing rapid, one-time Wi-Fi configurations for all zones.

1) The Wi-Fi module can be placed out of the unit for better Wi-Fi router signal coverage.

*The Wi-Fi module must be disconnected when the unit is connected to Modbus.

a: Wi-Fi module. b: Wi-Fi router.

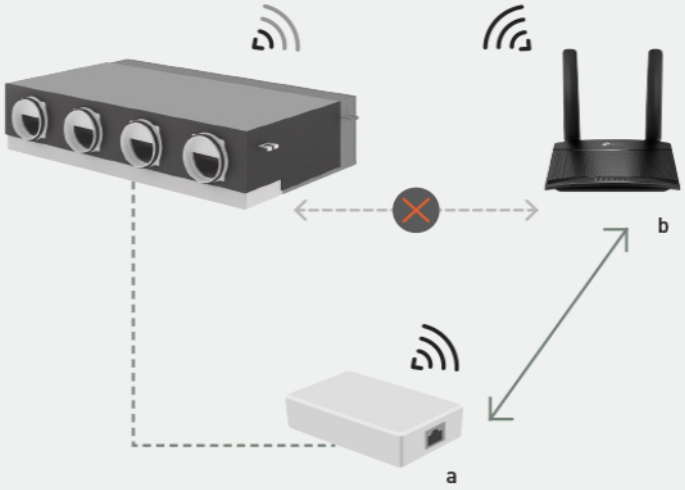

Comfort management anytime, anywhere with Aquarea Home app.

· Centralised remote control
· Further energy savings
· Weekly timer
· User-friendly interface

Built-in Wi-Fi and Ethernet internet connection*.
1. One simple and quick internet connection for all the zones. The multi-zone duct unit features a built-in Wi-Fi module with Ethernet port, providing rapid, one-time Wi-Fi configurations for all zones. The Wi-Fi module can be placed out of the unit for better Wi-Fi router signal coverage.
2. Comfort management anytime, anywhere with Aquarea Home app.

*The Wi-Fi module must be disconnected when the unit is connected to Modbus.

PACi NX Series

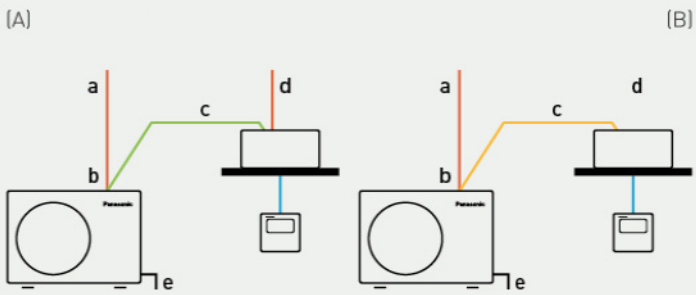

PACi NX Series for absolute ease of refurbishment. The next generation is here

NX Series with R32 refrigerant has been developed to meet the demand of easy refurbishment with 3 wire method. It makes it simple and easy to replace old systems with 3 wire connections, which is prevalent in many systems.

PACi PZ2/PZH2: 2 wire method. - PACi NX Series: 3 wire method.

a. Power supply - b: Outdoor unit power wiring - c: Signal wiring (2 wire shielded) - d: Power supply - e: Earth - f: Power + Signal Wiring (3 wire + earth)

a	❄	☼
7,1kW	A++	A+
10,0kW	A++	A+
12,5kW	254,5%	143,2%
14,0kW	251,8%	141,4%

PACi NX Standard – For economy and value

The Standard series are the perfect solutions for projects which demand quality on a limited budget.

· Absolute ease of refurbishment
· Low-height single fan outdoor unit design
· All-year-round efficiency with SEER A++ / SCOP A+
· Operation range up to 43°C in cooling and down to -15°C in heating
· Maximum piping length 50m

a: Energy class [1] and seasonal efficiency value ($\eta_{s,c}$/$\eta_{s,h}$)[2].

1) Energy label scale from A+++ to D for models below 12,0kW (EU regulation 626/2011). 2) $\eta_{s,c}$/$\eta_{s,h}$ values for models above 12,0kW (EN 14825).

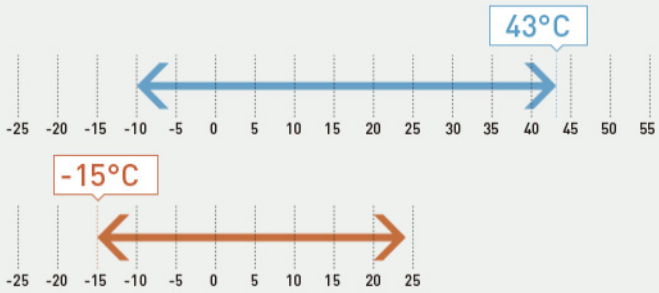

PACi NX Standard – Extended operation range up to 43°C in cooling and down to -15°C in heating

PACi NX Standard Series are capable of working even in the challenging ambient conditions. Cooling operation is possible when outdoor temperature is as low as -10°C or as high as 43°C. Heating operation can also be utilized for outdoor temperatures as low as -15°C and as high as 24°C .

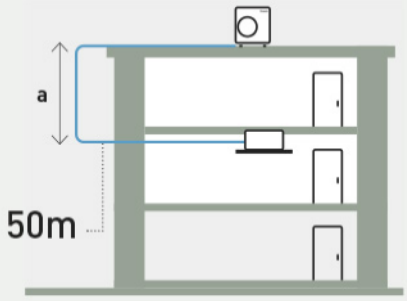

PACi NX Standard – Long piping allowance maximum 50m*

Long piping length gives great design flexibility to adapt various building types and sizes.
Piping length: 50m (10,0 to 14,0kW), 40m (6,0 to 7,1kW), 20m (5,0kW), 15m (>3,6kW).

a: Maximum height difference between outdoor unit and indoor unit: 30m (15m if the outdoor unit is below the indoor unit).

* For models 10,0 ~ 14,0kW.

Multi zone duct unit PQ4 / PQ5 Standard

PACi NX Series Standard multi zone duct unit		SINGLE PHASE					THREE PHASE			
		7.1 kW	10.0 kW	10.0 kW	12.5 kW	14.0 kW	10.0 kW	10.0 kW	12.5 kW	14.0 kW
Kit		KIT-71PQ41Z5	KIT-100PQ51Z5	KIT-100PQ41Z5	KIT-125PQ51Z5	KIT-140PQ51Z5	KIT-100PQ41Z8	KIT-100PQ51Z8	KIT-125PQ51Z8	KIT-140PQ51Z8
Remote controller		PCZ-EEB749	PCZ-EEB749	PCZ-EEB749	PCZ-EEB749	PCZ-EEB749	PCZ-EEB749	PCZ-EEB749	PCZ-EEB749	PCZ-EEB749
Cooling capacity (Nominal)	kW	7.0	9.8	9.0	12.0	13.2	9.0	9.8	12.0	13.2
Cooling capacity (Min)	kW	2.7	3.1	3.0	3.3	3. 4	3.0	3.1	3.3	3.4
Cooling capacity (Max)	kW	7.9	11.5	11.0	13.7	14.8	11.0	11.5	13.7	14.8
SEER / ηs,c (1)		6.6 A++	6.6 A++	6.2 A++	254.5%	251.8%	6.2 A++	6.6 A++	253.6%	250.9%
Heating capacity (Nominal)	kW	7.1	9.7	9.1	12.1	13.3	9.1	9.7	12.1	13.3
Heating capacity (Min)	kW	2.2	3.0	3.0	3.3	3.5	3.0	3.0	3.3	3.5
Heating capacity (Max)	kW	8.2	11.5	13.2	15.2	15.9	13.2	11.5	15.2	15.9
SCOP/ηsc (2)	%	4.3 A+	4.4 A+	4.3 A+	143.2%	141.4%	4.3 A+	4.4 A+	142.3%	140.6%
Indoor unit		S-7110PQ41E	S-1014PQ51E	S-7110PQ41E	S-1014PQ51E	S-1014PQ51E	S-7110PQ41E	S-1014PQ51E	S-1014PQ51E	S-1014PQ51E
Number of fans		4	5	4	5	5	4	5	5	5
External static pressure (Nominal) (2)	Pa	30	30	30	30	30	30	30	30	30
External static pressure (Min) (2)	Pa	10	10	10	10	10	10	10	10	10
External static pressure (Max) (2)	Pa	120	130	120	130	130	120	130	130	130
Indoor dimension (Height)	mm	266	266	266	266	266	266	266	266	266
Indoor dimension (Width)	mm	1164	1455	1164	1455	1455	1164	1455	1455	1455
Indoor dimension (Depth)	mm	701	701	701	701	701	701	701	701	701
Indoor net weight	kg	47	57	47	57	57	47	57	57	57
Outdoor unit		U-71PZ3E5A	U-100PZ3E5	U-100PZ3E5	U-125PZ3E5	U-140PZ3E5	U-100PZ3E8	U-100PZ3E8	U-125PZ3E8	U-140PZ3E8
Outdoor power source	V	220 - 230 - 240	220 - 230 - 240	220 - 230 - 240	220 - 230 - 240	220 - 230 - 240	380 - 400 - 415	380 - 400 - 415	380 - 400 - 415	380 - 400 - 415
Current in cooling (1p 220V / 3p 380)	A	9.95	13.30	13.30	17.20	20.50	4.45	4.45	5.75	6.85
Current in cooling (1p 230V / 3p 400)	A	9.50	12.70	12.70	16.40	19.60	4.20	4.20	5.45	6.50
Current in cooling (1p 240V / 3p 415)	A	9.10	12.20	12.20	15.80	18.8	4.05	4.05	5.25	6.30
Current in heating (1p 220V / 3p 380)	A	7.90	11.60	11.60	16.40	17.20	3.85	3.85	5.50	5.75
Current in heating (1p 230V / 3p 400)	A	7.55	11.10	11.10	15.70	16.40	3.70	3.70	5.20	5.45
Current in heating (1p 240V / 3p 415)	A	7.25	10.60	10.60	15.00	15.80	3.55	3.55	5.05	5.25
Outdoor air flow (Cool)	m³/min	44.7	73.0	73.0	82.0	84.0	73.0	73.0	82.0	84.0
Outdoor air flow (Heat)	m³/min	45.9	73.0	73.0	80.0	82.0	73.0	73.0	80.0	82.0
Outdoor sound pressure (Cool -Hi)	dB(A)	48	52	52	55	56	52	52	55	56
Outdoor sound pressure (Heat -Hi)	dB(A)	49	52	52	55	56	52	52	55	56
Outdoor sound power (Cool -Hi)	dB(A)	66	70	7	73	74	70	70	73	74
Outdoor sound power (Heat -Hi)	dB(A)	68	70	70	73	74	70	70	73	74
Outdoor dimension (Height)	mm	695	996	996	996	996	996	996	996	996
Outdoor dimension (Width)	mm	875	980	980	980	980	980	980	980	980
Outdoor dimension (Depth)	mm	320	370	370	370	370	370	370	370	370
Outdoor net weight	kg	50	83	83	87	87	83	83	87	87
Pipe diameter (Liquid)	Inch (mm)	1/4 (6.35)	3/8 (9.52)	3/8 (9.52)	3/8 (9.52)	3/8 (9.52)	3/8 (9.52)	3/8 (9.52)	3/8 (9.52)	3/8 (9.52)
Pipe diameter (Gas)	Inch (mm)	5/8 (15.88)	5/8 (15.88)	5/8 (15.88)	5/8 (15.88)	5/8 (15.88)	5/8 (15.88)	5/8 (15.88)	5/8 (15.88)	5/8 (15.88)
Pipe length range	m	3 ~ 40	5 ~ 50	5 ~ 50	5 ~ 50	5 ~ 50	5 ~ 50	5 ~ 50	5 ~ 50	5 ~ 50
Elevation difference (in / out) (3)	m	20 / 30	15 / 30	15 / 30	15 / 30	15 / 30	15 / 30	15 / 30	15 / 30	15 / 30
Pipe length for additional gas	m	30	30	30	30	30	30	30	30	30
Additional gas amount	g/m	17	45	45	45	45	45	45	45	45
Refrigerant (R32) / CO2 Eq.	kg / T	1.32 / 0.89	2.40 / 1.62	2.40 / 1.62	2.80 / 1.89	2.80 / 1.89	2.40 / 1.62	2.40 / 1.62	2.80 / 1.89	2.80 / 1.89
Operating range (Cool - Min)	°C	-10	-10	-10	-10	-10	-10	-10	-10	-10
Operating range (Cool - Max)	°C	43	43	43	43	43	43	43	43	43
Operating range (Heat - Min)	°C	-15	-15	-15	-15	-15	-15	-15	-15	-15
Operating range (Heat - Max)	°C	24	24	24	24	24	24	24	24	24

1) For models below 12kW, the SEER and SCOP is calculated based on values of EU/626/2011. For models above 12kW, the $\eta_{s,c}$ / $\eta_{s,h}$ values is calculated based on EN14825.
2) Medium external static pressure setting from factory.
3) Outdoor unit located lower / outdoor unit located higher.
*Recommended fuse for the indoor 3A.

Accessories

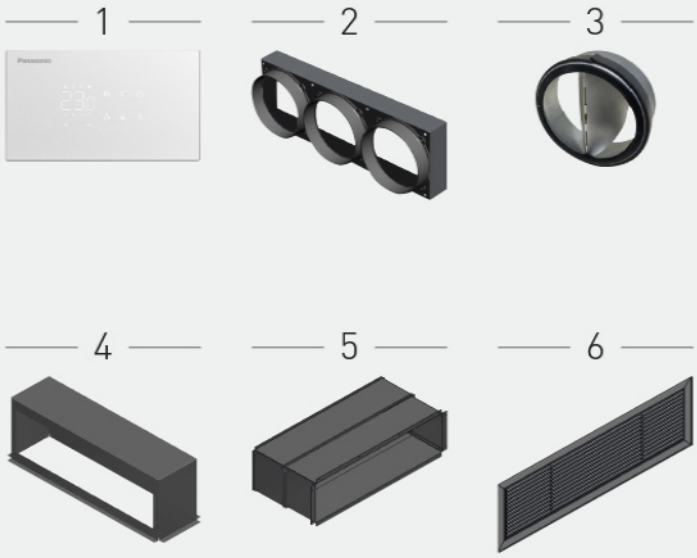

Accessories

1. PCZ-EEB749: Wall-mounted control.

2. PCZ-AHRD0468: Return plenum with 4 circular inlets DN 160 mm. For S-7110PQ41E.
2. PCZ-AHRD0469: Return plenum with 5 circular inlets DN 160 mm. For S-1014PQ51E.

3. PCZ-AHRD0519: Non-return damper

4. PCZ-AHRD0524: 90° shooting plenum. For S-7110PQ41E.
4. PCZ-AHRD0525: 90° shooting plenum. For S-1014PQ51E.

5. PCZ-AHRD0534: Telescopic kit for rear or directly coupled suction. 153 mm - 270 mm. For S-7110PQ41E.
5. PCZ-AHRD0535: Telescopic kit for rear or directly coupled suction. 153 mm - 270 mm. For S-1014PQ51E.

6. PCZ-AHRD0544: Grille for telescopic kit for rear intake. For S-7110PQ41E.
6. PCZ-AHRD0545: Grille for telescopic kit for rear intake. For S-1014PQ51E

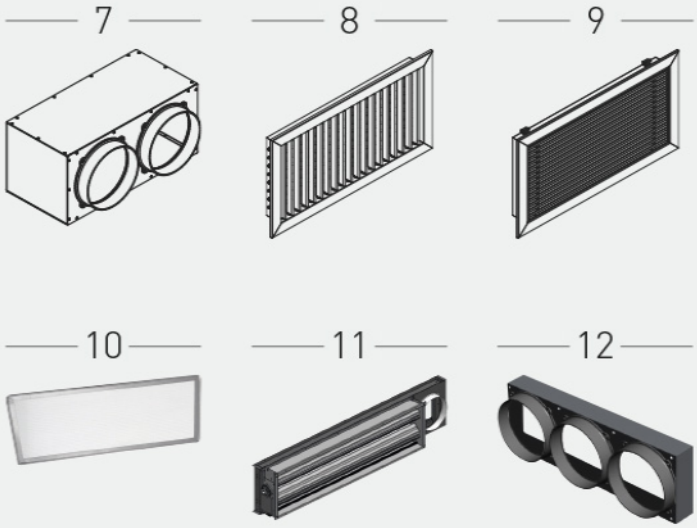

7. PCZ-AHRA0708: Insulated plenum for horizontal or vertical supply/return. For S-7110PQ41E.

8.PCZ-AHRA0709: White aluminium supply grille with double row of adjustable fins (450 x 225 mm). For S-7110PQ41E.

9. PCZ-AHRA0710: White aluminium intake grille with removable filter (450 x 225 mm). For S-7110PQ41E.

10. PCZ-AHRD0494: Replacement recirculation filter kit. For S-7110PQ41E.
10. PCZ-AHRD0495: Replacement recirculation filter kit. For S-1014PQ51E.

11. PCZ-AHRD0642: Plenum kit for external air connection with damper for room recirculation. For S-7110PQ41E.
11. PCZ-AHRD0643: Plenum kit for external air connection with damper for room recirculation. For S-1014PQ51E.

12. PCZ-AHRD0654: Ducting plate plenum kit for outdoor air connection with damper. For S-7110PQ41E.
12. PCZ-AHRD0655: Ducting plate plenum kit for outdoor air connection with damper. For S-1014PQ51E.

13. PCZ-AHRD0659: 90° plenum for outdoor air kit with damper. For S-7110PQ41E.
13. PCZ-AHRD0660: 90° plenum for outdoor air kit with damper. For S-1014PQ51E.

14. PCZ-AHRD0664: Telescopic kit. For plenum for outdoor air kit with damper. For S-7110PQ41E.
14. PCZ-AHRD0665: Telescopic kit. For plenum for outdoor air kit with damper. For S-1014PQ51E.

15. PCZ-AHRD0669: Grille for telescopic kit. For plenum for outdoor air kit with damper. For S-7110PQ41E.
15. PCZ-AHRD0670: Grille for telescopic kit. For plenum for outdoor air kit with damper. For S-1014PQ51E.

PACi NX Series multi zone duct unit.

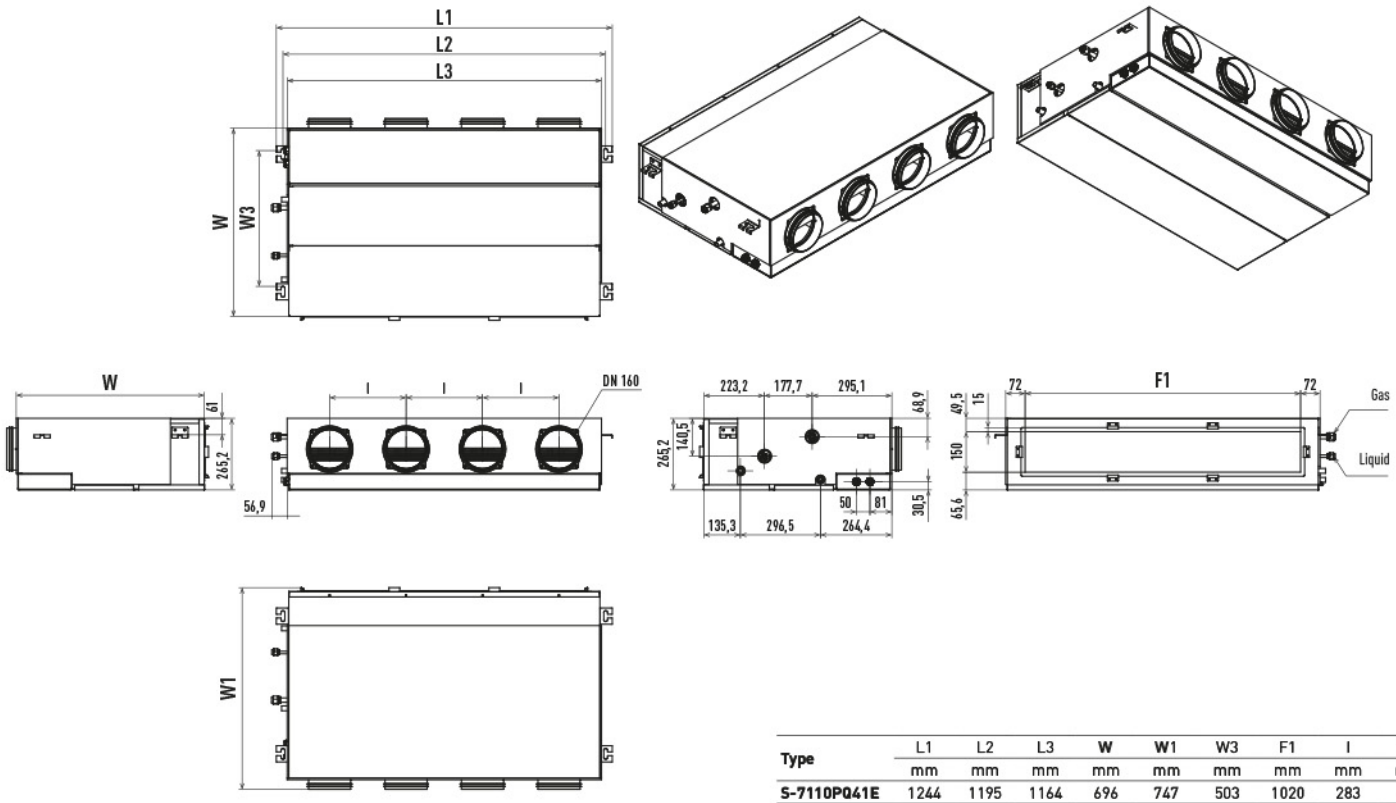

Type	L1	L2	L3	W	W1	W3	F1	I	H
	mm	mm	mm	mm	mm	mm	mm	mm	mm
S-7110PQ41E	1244	1195	1164	696	747	503	1020	283	265
S-1014PQ51E	1454	1405	1374	696	747	503	1230	283	265

Unit: mm

PACi NX Series Standard outdoor units 6,0 and 7,1 kW.

1	Mounting hole (4-R6,5), anchor bolt: M10
2	Refrigerant piping (liquid), Ø6,35 (flared)
3	Refrigerant piping (gas), Ø12,70 (flared). U-71PZ3E5, Ø15,88 (flared)

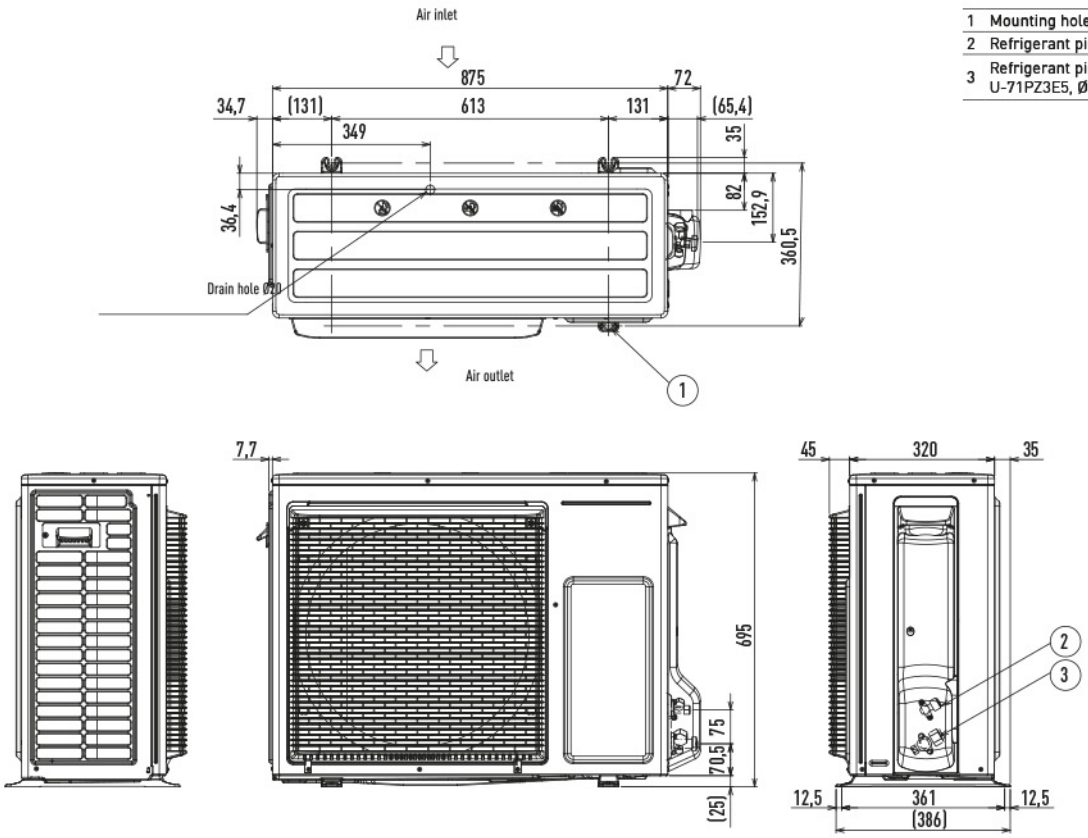

Unit: mm

PACi NX Series Standard outdoor units from 10,0 to 14,0 kW.

1	Mounting hole, anchor bolt: M10
2	Refrigerant piping (liquid), Ø9,52 (flared)
3	Refrigerant piping (gas), Ø15,88 (flared)
4	Refrigerant piping port

5	Electrical wiring port (Ø13)
6	Electrical wiring port (ØØ22)
7	Electrical wiring port (Ø27)
8	Electrical wiring port (Ø35)

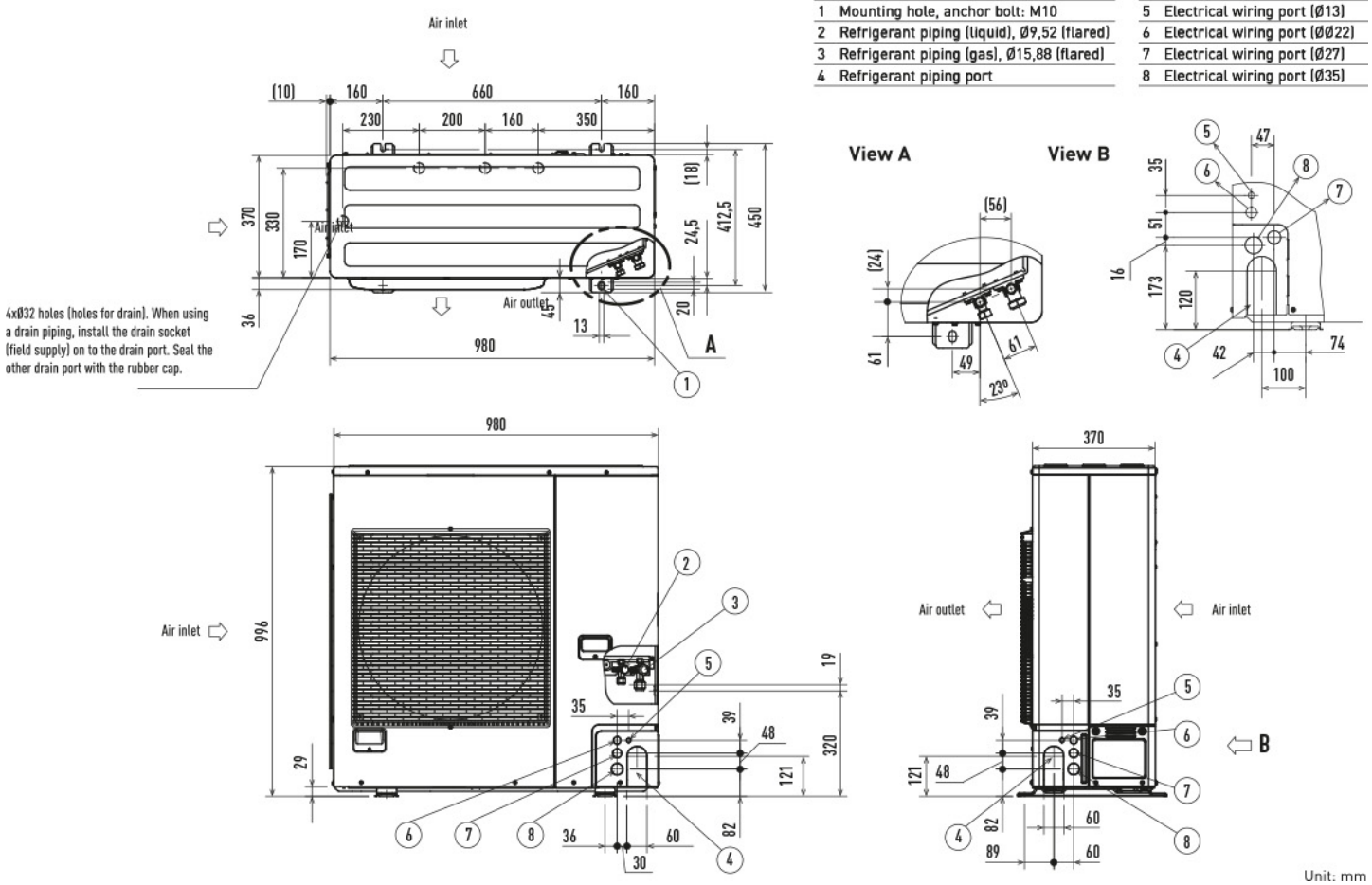

Unit: mm

PACi NX multi zone duct unit.

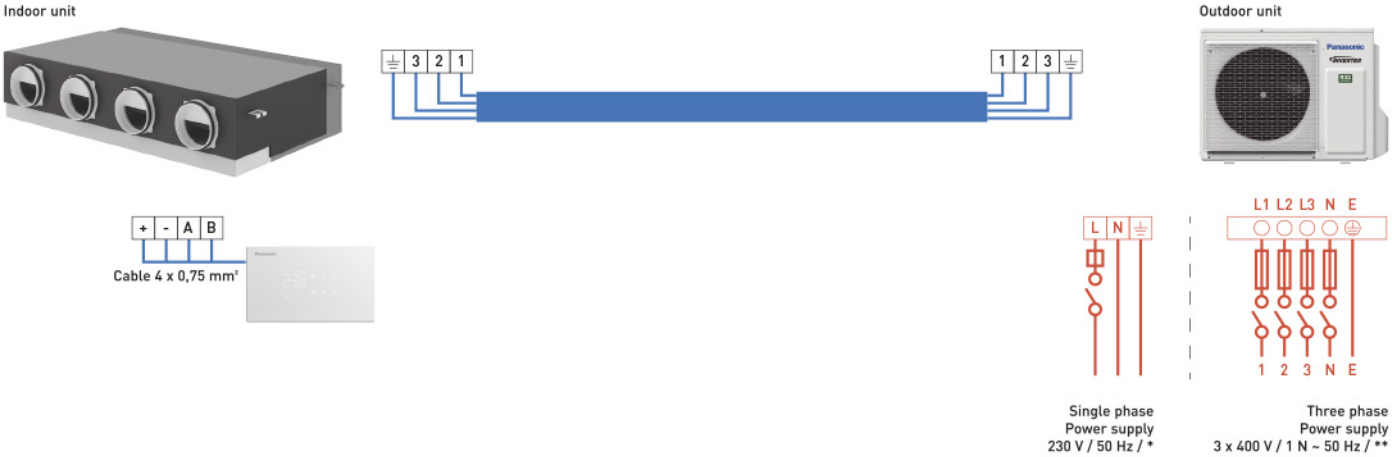

Single phase

Indoor unit	Connection indoor / outdoor	Outdoor unit	Power supply	Circuit breaker*
S-7110PQ41E	4 x 1,5 mm²	U-71PZ3E5A	220/230/240 V	20 A
S-7110PQ41E	4 x 2,5 mm²	U-100PZ3E5		35 A
S-1014PQ51E	4 x 2,5 mm²	U-100PZ3E5		35 A
S-1014PQ51E	4 x 2,5 mm²	U-125PZ3E5		40 A
S-1014PQ51E	4 x 2,5 mm²	U-140PZ3E5		40 A

Three phase

Indoor unit	Connection indoor / outdoor	Outdoor unit	Power supply	Circuit breaker**
S-7110PQ41E	4 x 2,5 mm²	U-100PZ3E8	380/400/415 V	16 A
S-1014PQ51E	4 x 2,5 mm²	U-100PZ3E8		16 A
S-1014PQ51E	4 x 2,5 mm²	U-125PZ3E8		20 A
S-1014PQ51E	4 x 2,5 mm²	U-140PZ3E8		20 A